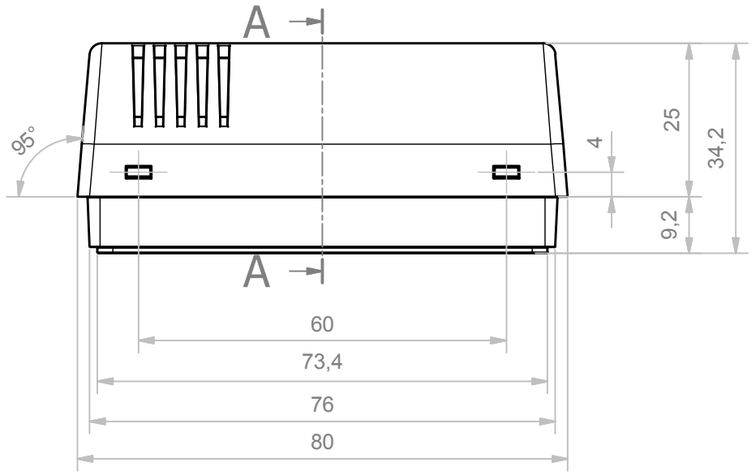

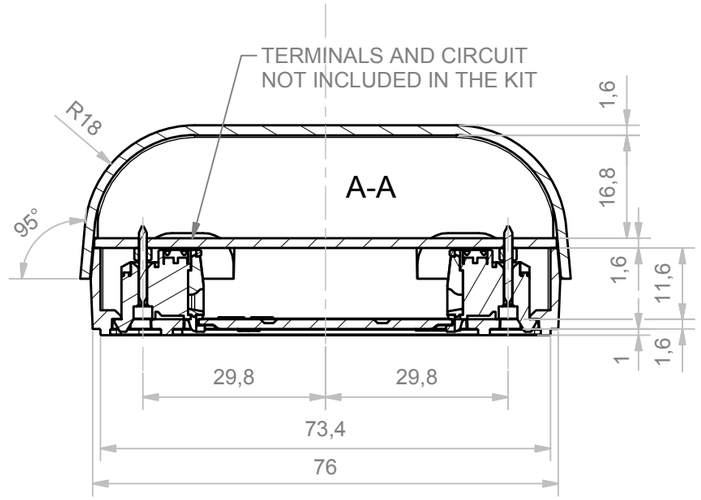

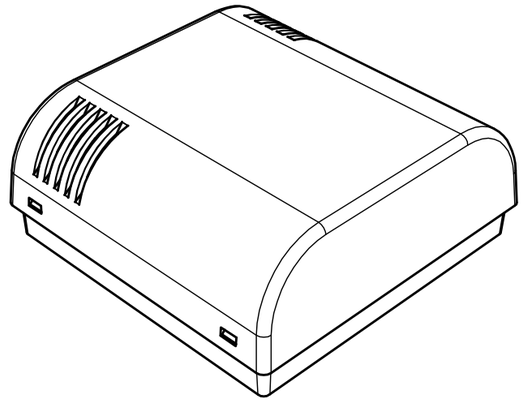

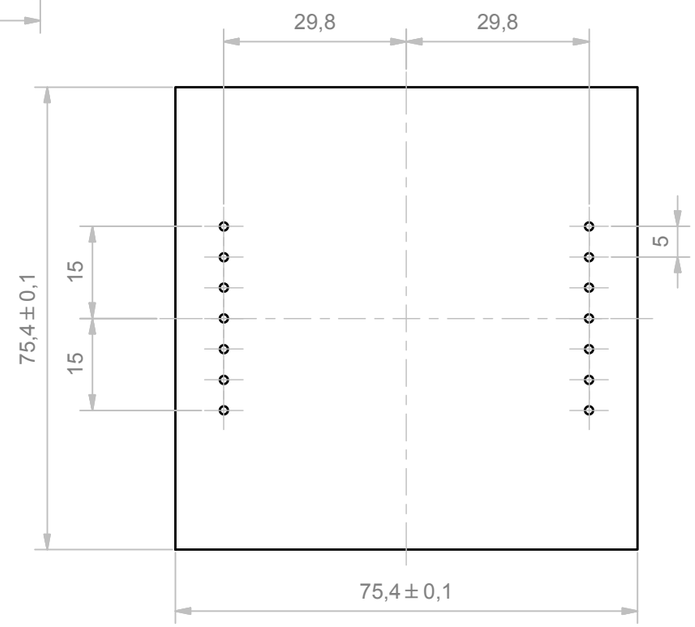

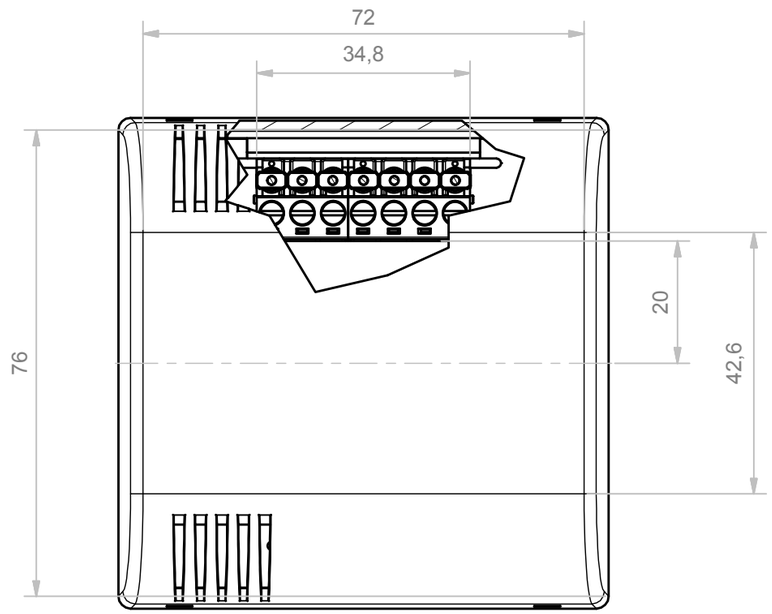

Da 0,5 a 3	Oltre 3 fino a 6	Oltre 6 fino a 30	Oltre 30 fino a 120	Oltre 120 fino a 400
± 0,1	± 0,1	± 0,2	± 0,3	± 0,5

RESERVED PROPERTY
The present drawing cannot be reproduced or comunicated to 3d parties, even partially, without the authorization of ITALTRONIC Srl. Italtronic reserves to protect its own rights according to the law.

Dimension in mm

SHEET NR. 1 / 1

DRAWING BY — Manual modification are not allowed

GENERAL TOLERANCE **UNI EN 22768/1 Media (m)**

Date: 08/01/2010

Replace nr.

Drawed: Mazzucato F.

Checked: Mazzucato F.

Scale:

5	4	3	2	1
				Sostituito coperchio inserito ventilato 14-12-2015 D.D.M.

Revision description

Denomination:

THERMO 80 CSF 14 WITH VENTILATION

ITALTRONIC S.R.L.
VIA AUSTRIA 25/D 35127
PADOVA - ITALY
www.italtronic.com

Drawing nr.

T-02725-01