THIS DOCUMENT IS THE PROPERTY OF KEYSTONE ELECTRONICS CORP. AND SHALL NOT BE REPRODUCED, DISTRIBUTED OR USED AS A BASIS FOR MANUFACTURE WITHOUT PRIOR WRITTEN PERMISSION FROM KEYSTONE ELECTRONICS CORP.

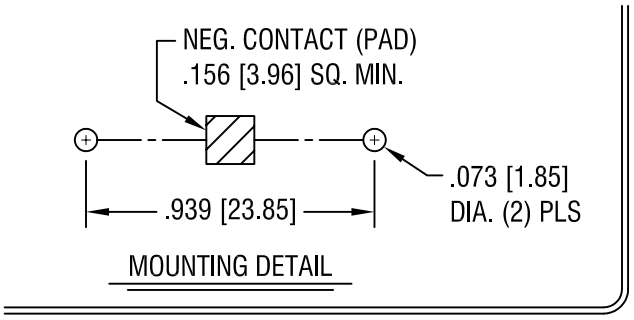

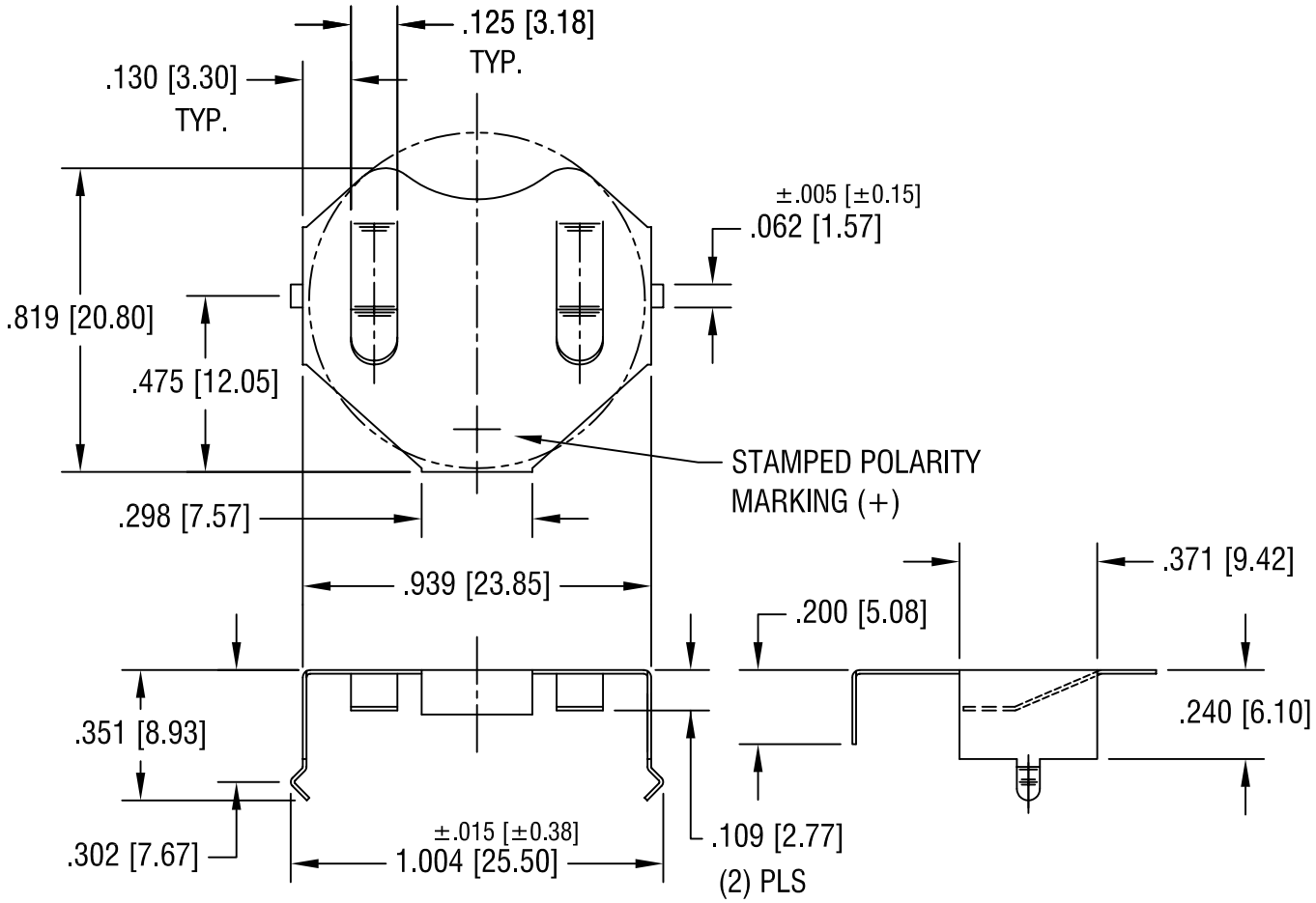

9.22.06	CHANGE AS PER ECN 06–060	B
DATE	DESCRIPTION	REV.

KEYSTONE ELECTRONICS CORP.
ASTORIA, N.Y. 11105-2017

PART NAME: 2354 PC COIN CELL CLIP			
MATERIAL: .010 [0.25] TH'K PHOSPHOR BRONZE			
FINISH: TIN NICKEL PLATE	DRN BY: BOONE	DATE: 9.11.00	
	APP'D: LN	SCALE: 2X	
TOLERANCES INCH [MM] DECIMAL ± .010 [± 0.25] ANGULAR ± 1° UNLESS OTHERWISE SPECIFIED	CODE: C	DWG NO.: 3011	