DATE	DESCRIPTION	REV.
3.7.02	CHANGE AS PER ECN 02-021	A

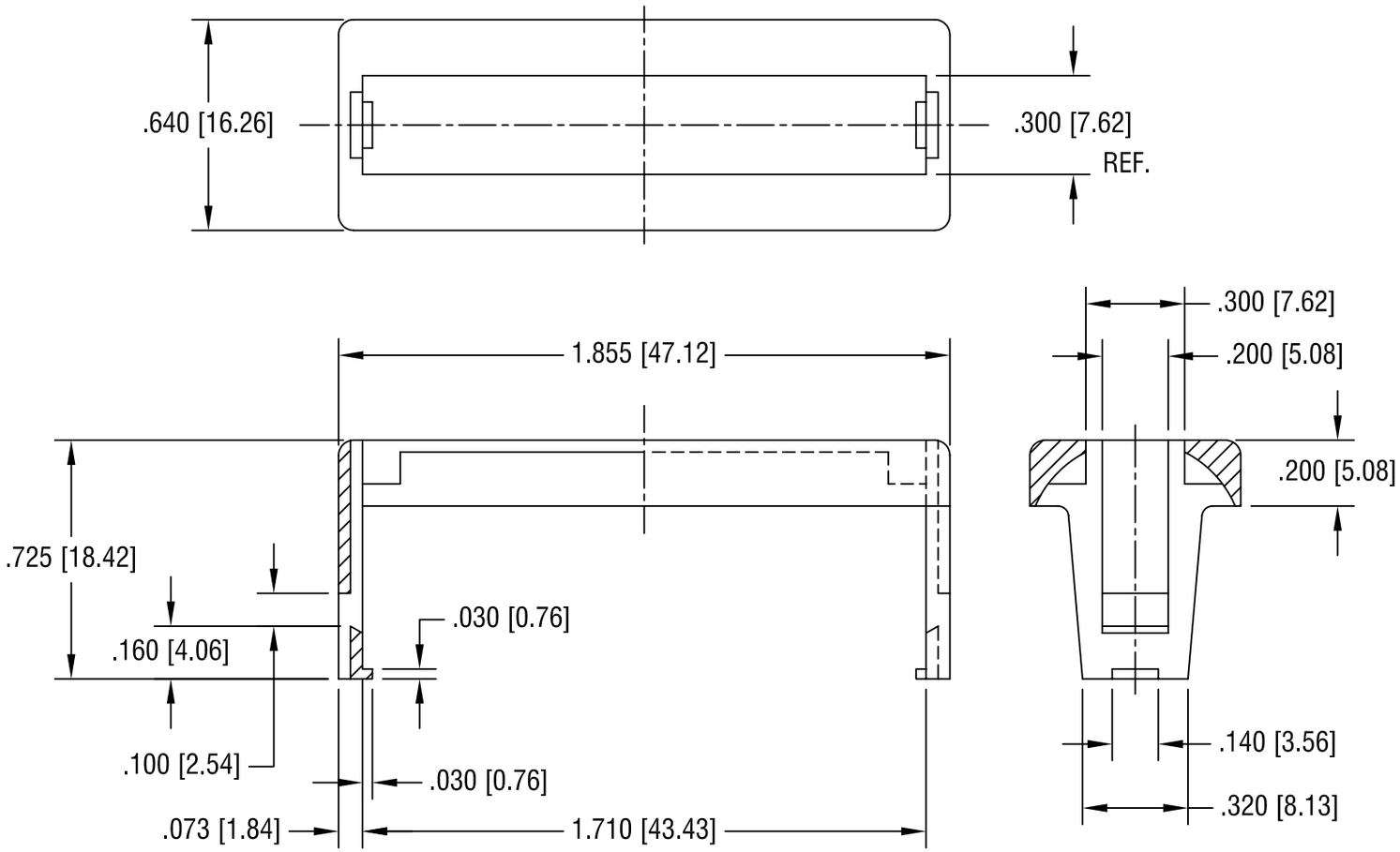

KEYSTONE ELECTRONICS CORP.
ASTORIA, N.Y. 11105-2017

PART NAME	COVER, BATTERY HOLDER		
MATERIAL	PBT, BLACK UL 94V-0		
FINISH	-	DRN BY BOONE	DATE 12.5.01
		APP'D	SCALE 2X
TOLERANCES INCH [MM] DECIMAL ± .010 [± 0.25] ANGULAR ± 1° UNLESS OTHERWISE SPECIFIED	CODE C	DWG NO.	1029LC

THIS DOCUMENT IS THE PROPERTY OF KEYSTONE ELECTRONICS CORP. AND SHALL NOT BE REPRODUCED, DISTRIBUTED OR USED AS A BASIS FOR MANUFACTURE WITHOUT PRIOR WRITTEN PERMISSION FROM KEYSTONE ELECTRONICS CORP.