THIS DOCUMENT IS THE PROPERTY OF KEYSTONE ELECTRONICS CORP. AND SHALL NOT BE REPRODUCED, DISTRIBUTED OR USED AS A BASIS FOR MANUFACTURE WITHOUT PRIOR WRITTEN PERMISSION FROM KEYSTONE ELECTRONICS CORP.

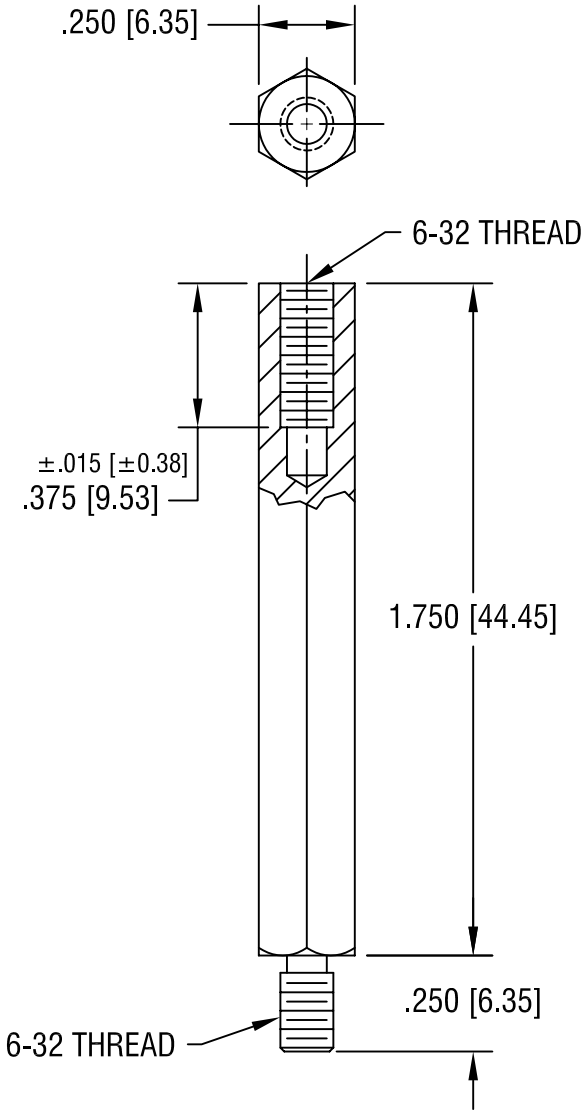


**KEYSTONE ELECTRONICS CORP.**
ASTORIA, N.Y. 11105-2017

| | | | |
|---|---|---|---|
| PART NAME | HEX M/F STANDOFF | | |
| MATERIAL | BRASS | | |
| FINISH | NICKEL PLATE | DRN BY BOONE | DATE 3.3.98 |
| | | APP'D | SCALE 2X |
| TOLERANCES INCH [MM]<br>DECIMAL ± .005 [± 0.15 ]<br>ANGULAR ± 1°<br>UNLESS OTHERWISE SPECIFIED | CODE C/M | DWG NO. 7215 | |

| DATE | DESCRIPTION | REV. |
|---|---|---|
| | | |