THIS DOCUMENT IS THE PROPERTY OF KEYSTONE ELECTRONICS CORP. AND SHALL NOT BE REPRODUCED, DISTRIBUTED OR USED AS A BASIS FOR MANUFACTURE WITHOUT PRIOR WRITTEN PERMISSION FROM KEYSTONE ELECTRONICS CORP.

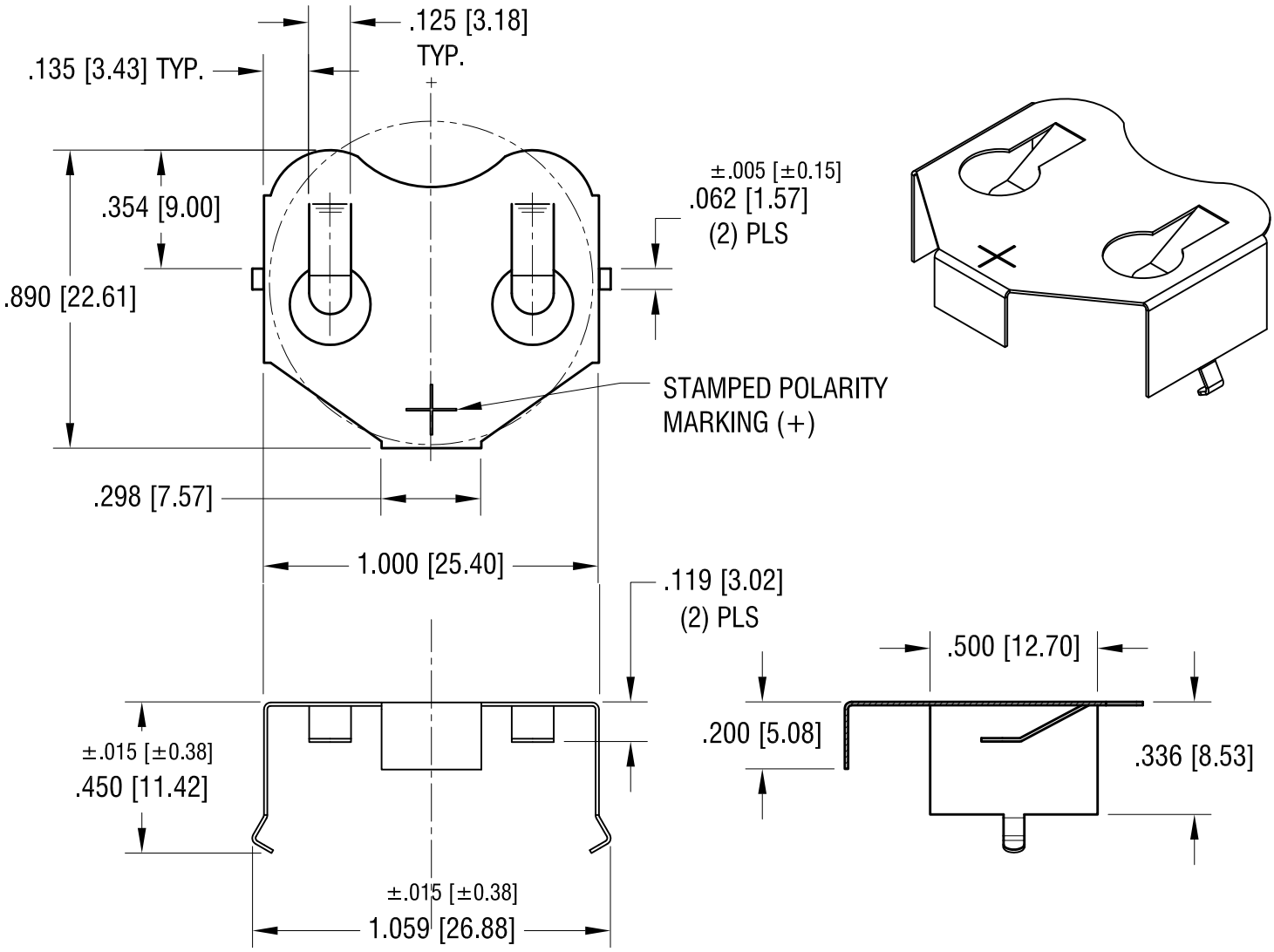

KEYSTONE ELECTRONICS CORP.
www.keyelco.com • ASTORIA, N.Y. 11105-2017 • Tel (718) 956-8900

PART NAME: 2477 THM COIN CELL CLIP			
MATERIAL: .010 [0.25] TH'K PHOSPHOR BRONZE			
FINISH: TIN NICKEL PLATE	DRN BY: NT	DATE: 8.26.11	
	APP'D: LN	SCALE: 2X	
TOLERANCES INCH [MM] DECIMAL ± .010 [± 0.25] ANGULAR ± 1° UNLESS OTHERWISE SPECIFIED	CODE: C	DWG NO. 3039	

DATE	DESCRIPTION	REV.
8.29.11	CHANGE AS PER ECN 11–118	A