THIS DOCUMENT IS THE PROPERTY OF KEYSTONE ELECTRONICS CORP. AND SHALL NOT BE REPRODUCED, DISTRIBUTED OR USED AS A BASIS FOR MANUFACTURE WITHOUT PRIOR WRITTEN PERMISSION FROM KEYSTONE ELECTRONICS CORP.

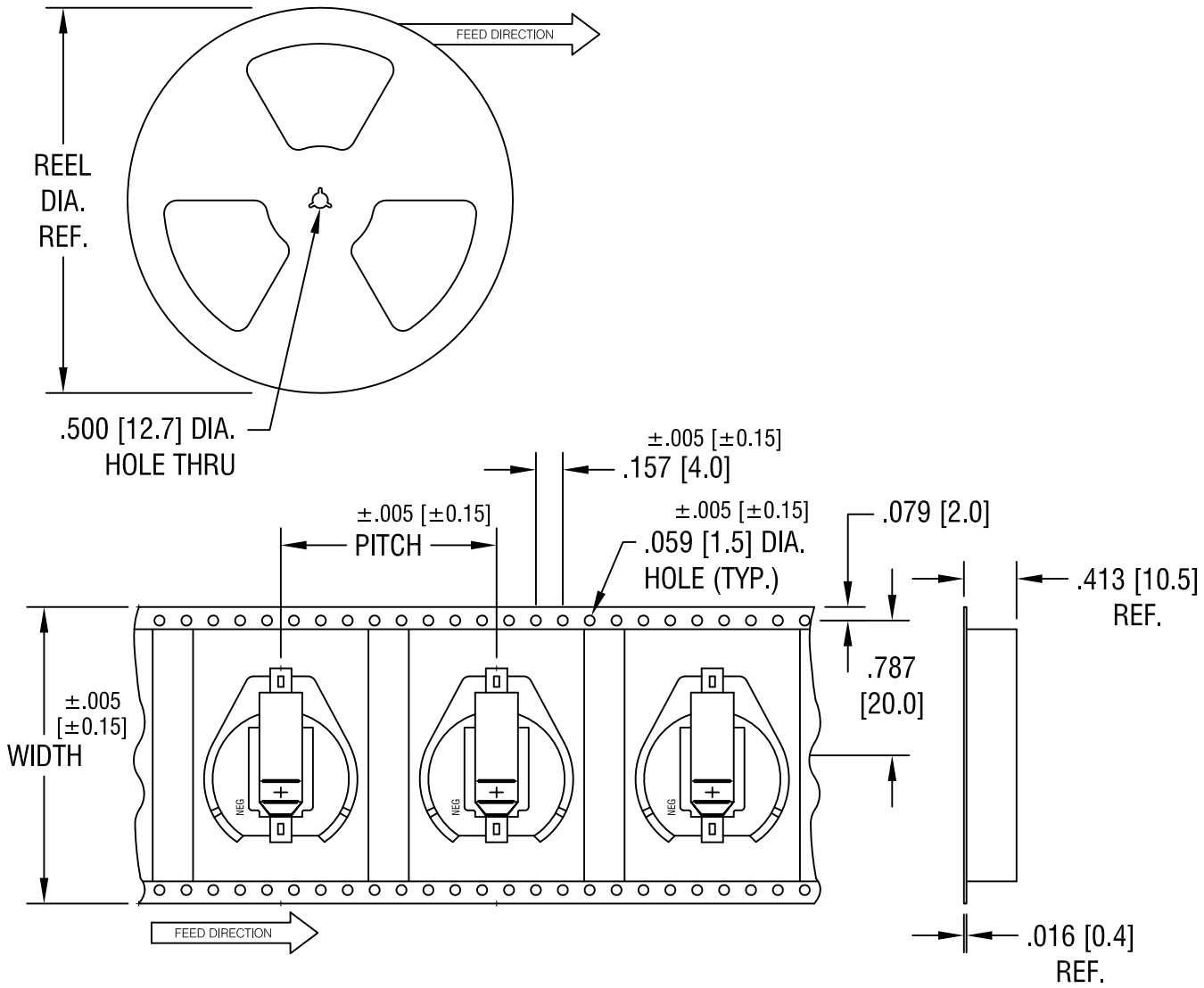

NOTES:

TAPE AND REEL SPECIFICATIONS:

1. TAPE:
   MAT'L - ALL CONDUCTIVE POLYSTYRENE CARRIER
   ANSI/EIA-481 STANDARD
   1.732 [44.0] WIDE; 1.260 [32.0] PITCH
2. REEL:
   13.0 [330.2] DIA. 200 PIECES OF
   PART NO. 1082 PER REEL.

DATE	DESCRIPTION	REV.

KEYSTONE ELECTRONICS CORP.

www.keyelco.com • ASTORIA, N.Y. 11105-2017 • Tel (718) 956-8900

PART NAME: 20mm SM COIN CELL HOLDER ON TAPE			
MATERIAL: AS NOTED			
FINISH: AS NOTED	DRN BY: NT	DATE: 3.19.09	
	APP'D: LN	SCALE: X	
TOLERANCES INCH [MM] DECIMAL ± .015 [± 0.38] ANGULAR ± 1° UNLESS OTHERWISE SPECIFIED	CODE: C/M	DWG NO.: 1082TR	

DATE	DESCRIPTION	REV.
8.12.11	CHANGE AS PER ECN 11–104	A

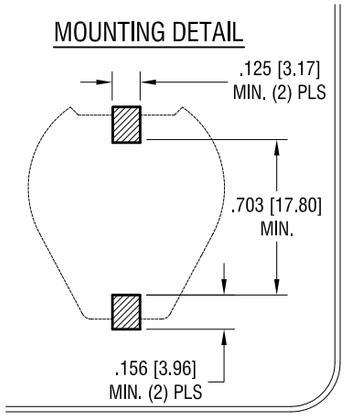

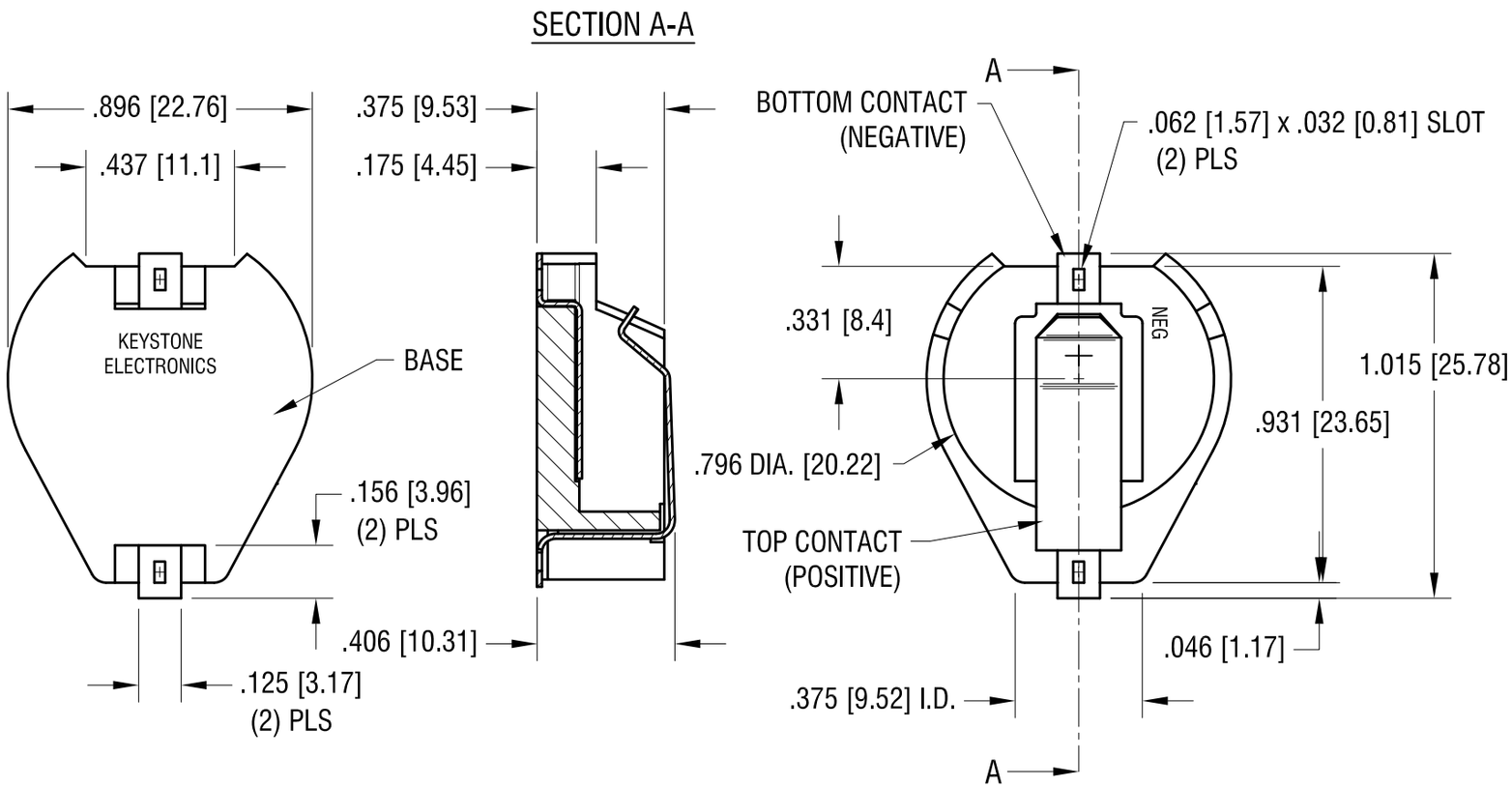

NOTES:

1. BASE:
   MAT'L - HIGH TEMPERATURE NYLON (UL 94V-0)
   COLOR BLACK
2. CONTACTS (TOP AND BOTTOM):
   MAT'L - .015 [0.38] TH'K SPRING STEEL
   FINISH: GOLD FLASH PLATE

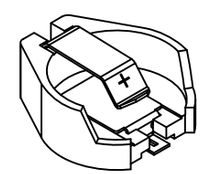

ACTUAL SIZE

THIS DOCUMENT IS THE PROPERTY OF KEYSTONE ELECTRONICS CORP. AND SHALL NOT BE REPRODUCED, DISTRIBUTED OR USED AS A BASIS FOR MANUFACTURE WITHOUT PRIOR WRITTEN PERMISSION FROM KEYSTONE ELECTRONICS CORP.

KEYSTONE ELECTRONICS CORP.
www.keyelco.com • ASTORIA, N.Y. 11105-2017 • Tel (718) 956-8900

PART NAME: DUAL 20mm BATTERY HOLDER, SMT

MATERIAL: AS NOTED

FINISH: AS NOTED

DRN BY: NT | DATE: 3.19.09

APP'D: LN | SCALE: 2X

TOLERANCES: INCH [MM]
DECIMAL ± .010 [± 0.25]
ANGULAR ± 1°
UNLESS OTHERWISE SPECIFIED

CODE: C

DWG NO. 1082