THIS DOCUMENT IS THE PROPERTY OF KEYSTONE ELECTRONICS CORP. AND SHALL NOT BE REPRODUCED, DISTRIBUTED OR USED AS A BASIS FOR MANUFACTURE WITHOUT PRIOR WRITTEN PERMISSION FROM KEYSTONE ELECTRONICS CORP.

ACTUAL SIZE

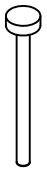

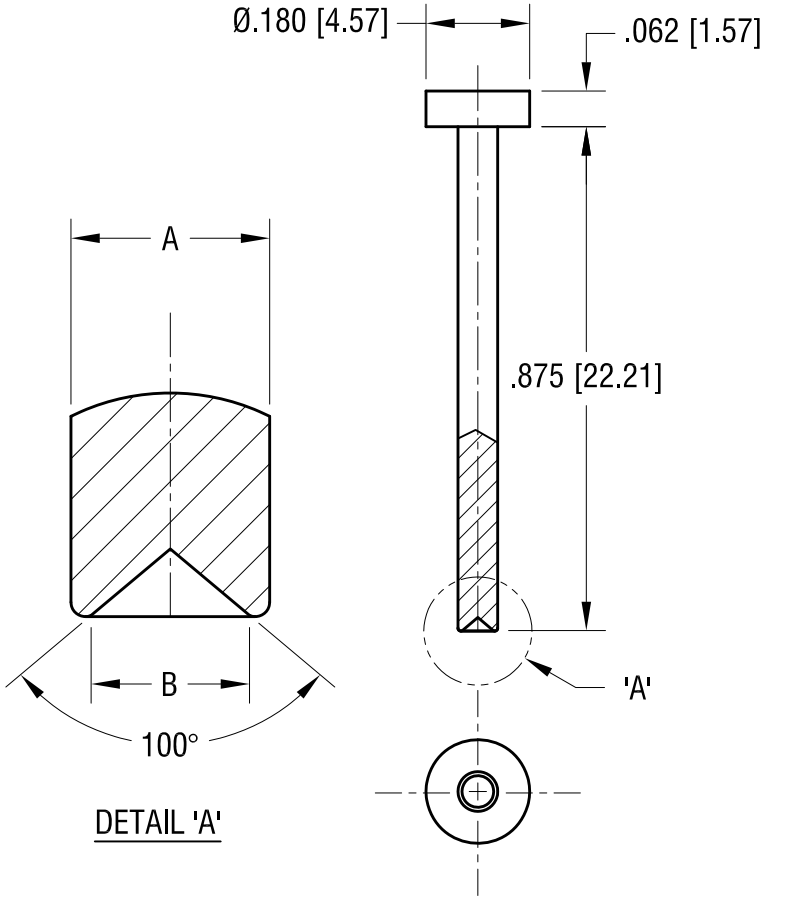


DETAIL 'A'

| PART NO. | A | B |
|---|---|---|
| 1315 | .045 [1.14] | .038 [0.96] |
| 1316 | .069 [1.75] | .055 [1.40] |

| DATE | DESCRIPTION | REV. |
|---|---|---|
| 7.10.15 | REDRAWN IN CAD AND SOLID WORK | |
| 9.16.94 | CHANGE AS PER ECR 94-054 | A |

**KEYSTONE ELECTRONICS CORP.**

www.keyelco.com • ASTORIA, N.Y. 11105-2017 • Tel (718) 956-8900

PART NAME: RECEDING PIN

MATERIAL: STEEL

FINISH: BLACK OXIDE

DRN BY: LN | DATE: 8.12.83

APP'D: LN | SCALE: 3X

TOLERANCES INCH [MM]
DECIMAL ± .005 [± 0.13 ]
ANGULAR ± 1°
UNLESS OTHERWISE SPECIFIED

CODE: C

DWG NO.: 1315 - 1316