THIS DOCUMENT IS THE PROPERTY OF KEYSTONE ELECTRONICS CORP. AND SHALL NOT BE REPRODUCED, DISTRIBUTED OR USED AS A BASIS FOR MANUFACTURE WITHOUT PRIOR WRITTEN PERMISSION FROM KEYSTONE ELECTRONICS CORP.

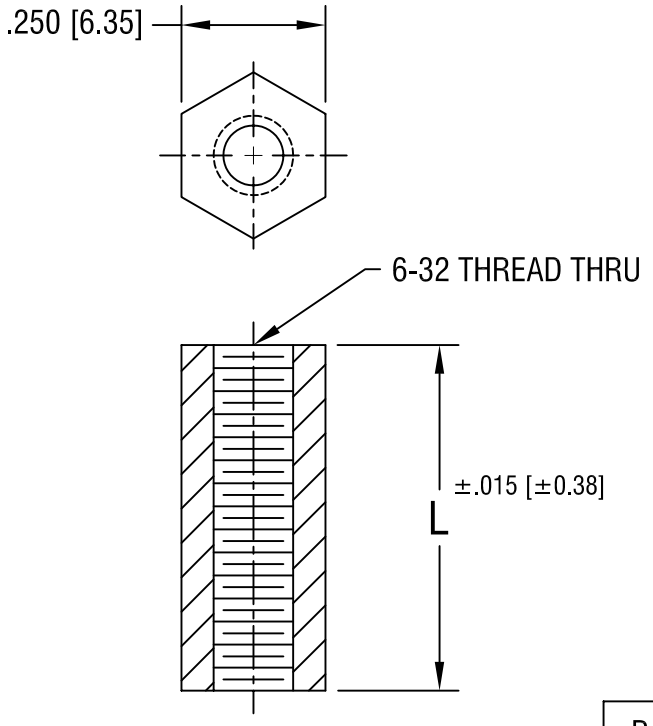

PART NO.	'L' DIM.
1903A	.250 [6.35]
1903B	.375 [9.52]
1903C	.500 [12.70]
1903F	.625 [15.87]
1903D	.750 [19.05]
1903G	.875 [22.22]
1903E	1.000 [25.4]

KEYSTONE ELECTRONICS CORP.
ASTORIA, N.Y. 11105-2017

PART NAME: HEX THREADED STANDOFF

MATERIAL: NYLON 6/6

FINISH: -

DRN BY: BOONE | DATE: 1.18.00

APP'D: LN | SCALE: 3X

TOLERANCES INCH [MM]
DECIMAL ± .005 [± 0.15]
ANGULAR ± 1°
UNLESS OTHERWISE SPECIFIED

CODE: C/M

DWG NO. 1903-

DATE	DESCRIPTION	REV.