THIS DOCUMENT IS THE PROPERTY OF KEYSTONE ELECTRONICS CORP. AND SHALL NOT BE REPRODUCED, DISTRIBUTED OR USED AS A BASIS FOR MANUFACTURE WITHOUT PRIOR WRITTEN PERMISSION FROM KEYSTONE ELECTRONICS CORP.

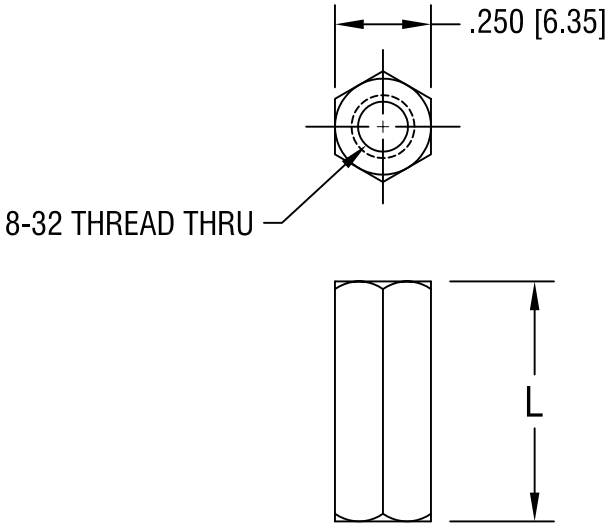

PART NO.	'L' DIM.
2215	.250 [6.35]
2216	.375 [9.52]
2217	.500 [12.70]
2218	.750 [19.05]
2219	1.000 [25.4]

KEYSTONE ELECTRONICS CORP.
ASTORIA, N.Y. 11105-2017

PART NAME: THREADED HEX STANDOFF

MATERIAL: ALUMINUM

FINISH: CLEAR IRIDITE

DRN BY: BOONE | DATE: 2.13.98

APP'D: LN | SCALE: 2X

TOLERANCES INCH [MM]
DECIMAL ± .005 [± 0.15]
ANGULAR ± 1°
UNLESS OTHERWISE SPECIFIED

CODE: C/M

DWG NO. 2215-2219

DATE	DESCRIPTION	REV.