THIS DOCUMENT IS THE PROPERTY OF KEYSTONE ELECTRONICS CORP. AND SHALL NOT BE REPRODUCED, DISTRIBUTED OR USED AS A BASIS FOR MANUFACTURE WITHOUT PRIOR WRITTEN PERMISSION FROM KEYSTONE ELECTRONICS CORP.

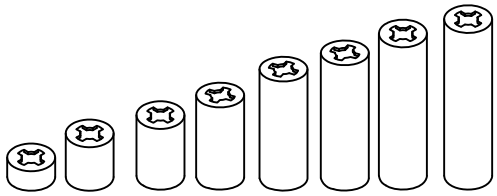

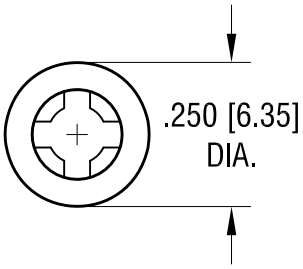

SECTION A-A

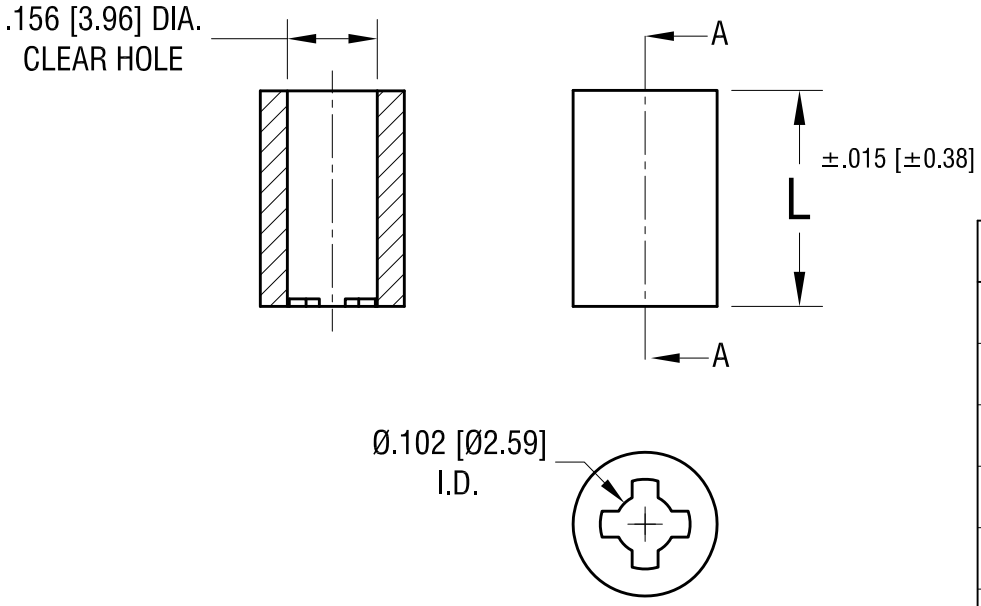

PART NO.	'L' DIM.
2341	.125 [3.17]
2342	.250 [6.35]
2343	.375 [9.52]
2344	.500 [12.70]
2345	.625 [15.87]
2346	.750 [19.04]
2347	.875 [22.21]
2348	1.00 [25.40]

DATE	DESCRIPTION	REV.

KEYSTONE ELECTRONICS CORP.

www.keyelco.com • ASTORIA, N.Y. 11105-2017 • Tel (718) 956-8900

PART NAME: #4 RETAINING SPACER

MATERIAL: NYLON 6/6

FINISH: -

DRN BY: NT | DATE: 3.15.11

APP'D: LN | SCALE: 3X

TOLERANCES INCH [MM]
DECIMAL ± .005 [± 0.13]
ANGULAR ± 1°
UNLESS OTHERWISE SPECIFIED

CODE: C/M

DWG NO. 2341-2348