THIS DOCUMENT IS THE PROPERTY OF KEYSTONE ELECTRONICS CORP. AND SHALL NOT BE REPRODUCED, DISTRIBUTED OR USED AS A BASIS FOR MANUFACTURE WITHOUT PRIOR WRITTEN PERMISSION FROM KEYSTONE ELECTRONICS CORP.

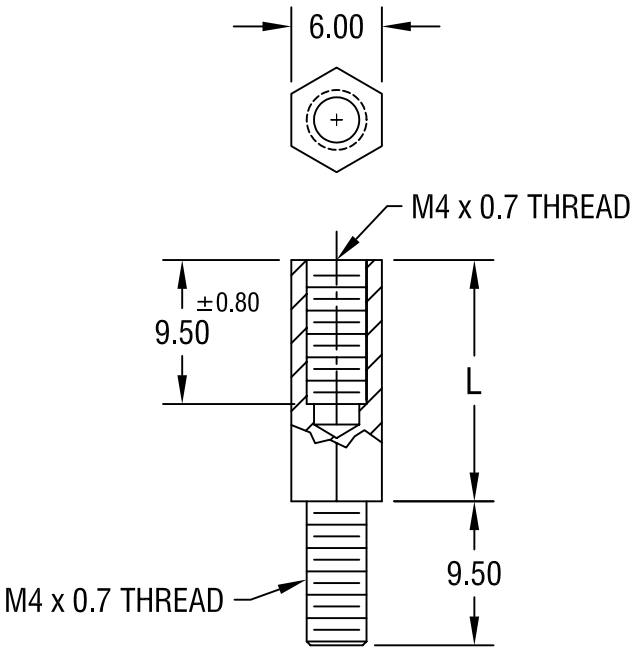

PART NO.	'L' DIM.
25521	10.00
25522	12.00
25523	15.00
25524	18.00
25525	20.00
25526	25.00

NOTE:

1. ALL DIMENSIONS ARE IN MILLIMETERS

DATE	DESCRIPTION	REV.

KEYSTONE ELECTRONICS CORP.
ASTORIA, N.Y. 11105-2017

PART NAME: 6.0mm M/F HEX STANDOFF

MATERIAL: NYLON 6/6

FINISH: -

DRN BY: BOONE | DATE: 10.11.06

APP'D: LN | SCALE: 2X

TOLERANCES INCH [MM]
DECIMAL ± [± 0.40]
ANGULAR ± 1°
UNLESS OTHERWISE SPECIFIED

CODE: C/M

DWG NO. 25521-25526