THIS DOCUMENT IS THE PROPERTY OF KEYSTONE ELECTRONICS CORP. AND SHALL NOT BE REPRODUCED, DISTRIBUTED OR USED AS A BASIS FOR MANUFACTURE WITHOUT PRIOR WRITTEN PERMISSION FROM KEYSTONE ELECTRONICS CORP.

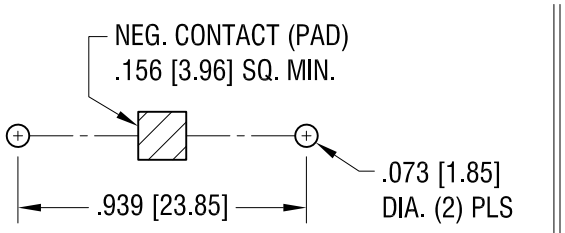

MOUNTING DETAIL

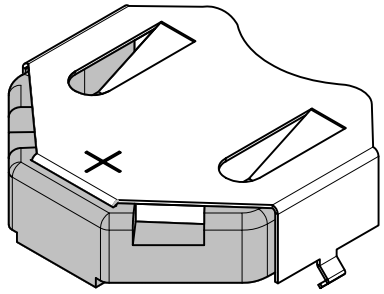

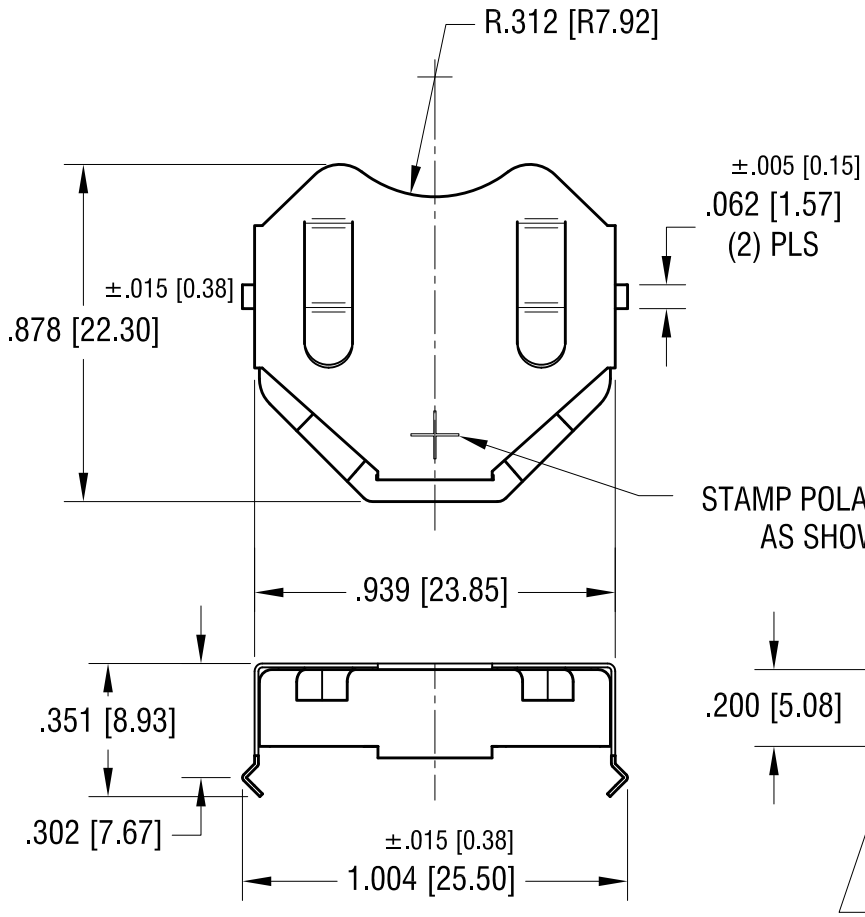

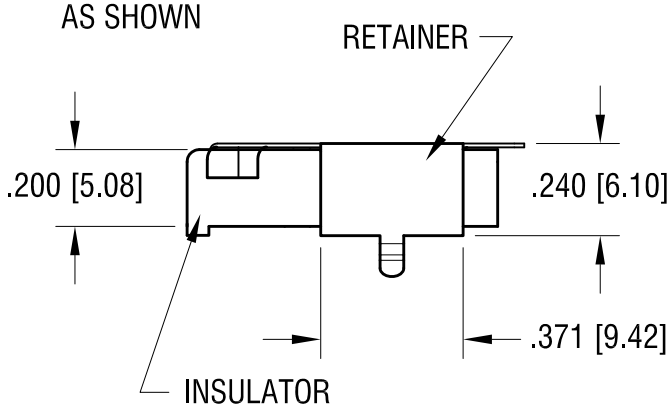

NOTE:

1. CLIP MAT'L: .010 TH'K FULL HARD PHOSPHOR BRONZE
   INSULATOR MAT'L: NYLON
2. CLIP FINISH: TIN NICKEL PLATE

DATE	DESCRIPTION	REV.

KEYSTONE ELECTRONICS CORP.

www.keyelco.com • ASTORIA, N.Y. 11105-2017 • Tel (718) 956-8900

PART NAME: PC COIN CELL CLIP FOR TWO 2020 OR 2025			
MATERIAL: AS NOTED			
FINISH: AS NOTED	DRN BY: NT	DATE: 9.09.09	
	APP'D: LN	SCALE: 2X	
TOLERANCES INCH [MM] DECIMAL ± .010 [± 0.25] ANGULAR ± 1° UNLESS OTHERWISE SPECIFIED	CODE: C	DWG NO. 3023	